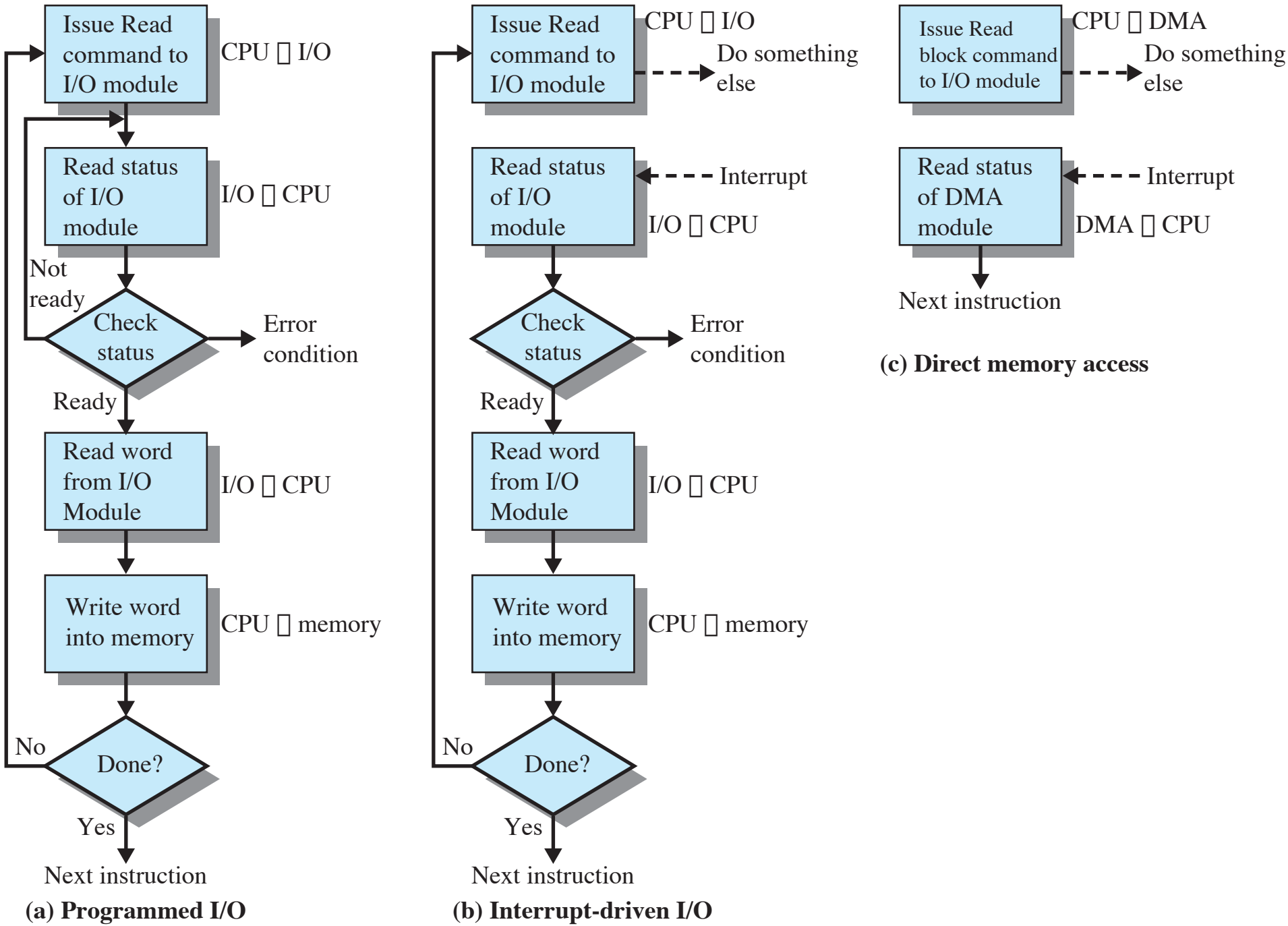

Figure 1.19 Three Techniques for Input of a Block of Data