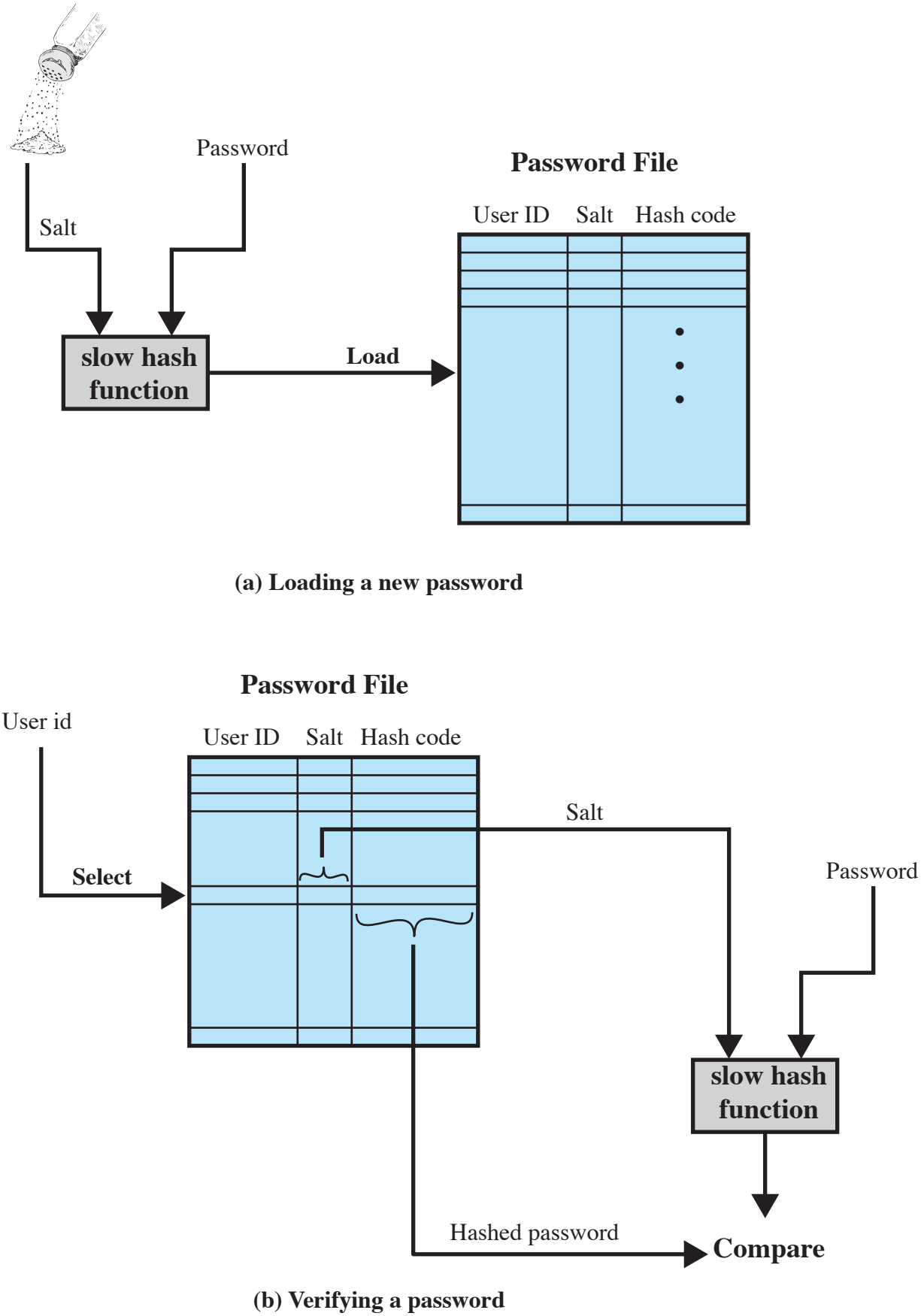

Figure 15.1 UNIX Password Scheme